Surge & Lightning
Monitoring Device

For Metal Oxide Surge Arresters from 6 to 800kV AC

Monitoring of surge arrester, EGLA, MOA, MOR, SPD, TLA.

- LoRa, Sigfox and NFC wireless solution. Wired via RS485. Digital output.
- Solar supply & external supply versions.
- Unique condition monitoring : resistive leakage current & total discharged energy monitoring system, lightning, surge events and discharges records.
- Durable device: stainless steel, polycarbonate UV resistant, aluminum. Outdoor device : IP65.
- Up to 3 phases / surge arresters on the same device.
- Monitoring software
- GPS localisation and timestamp

A unique and innovative device to master surges activities

Paralec has dedicated its research activities to lightning and surges qualification. This new range of products aims at helping our customer to understand the origin of surges, thier parameters and impact on equipment.

It involves diagnostic of metal oxide based surge arresters (MOR,TLA, MOA) in service, record peak currents, historical data, number of events, cumulative charges discharged by equipment.

It allows ageing and problems qualification to reach higher accuracy in order to optimize reliability and expenditure.

With a communication range of 5km on Sigfox or LoRaWan standards allows the user have a safe and remote connection.

SMC Surge Monitoring can be installed easily on ground conductors.

Thanks to its IP65, housing, rugged materials and self power, the SMC suitable for outdoor.

Power supply is ensured through supercap cell and solar panels. Optional DC power supply can also be arranged.

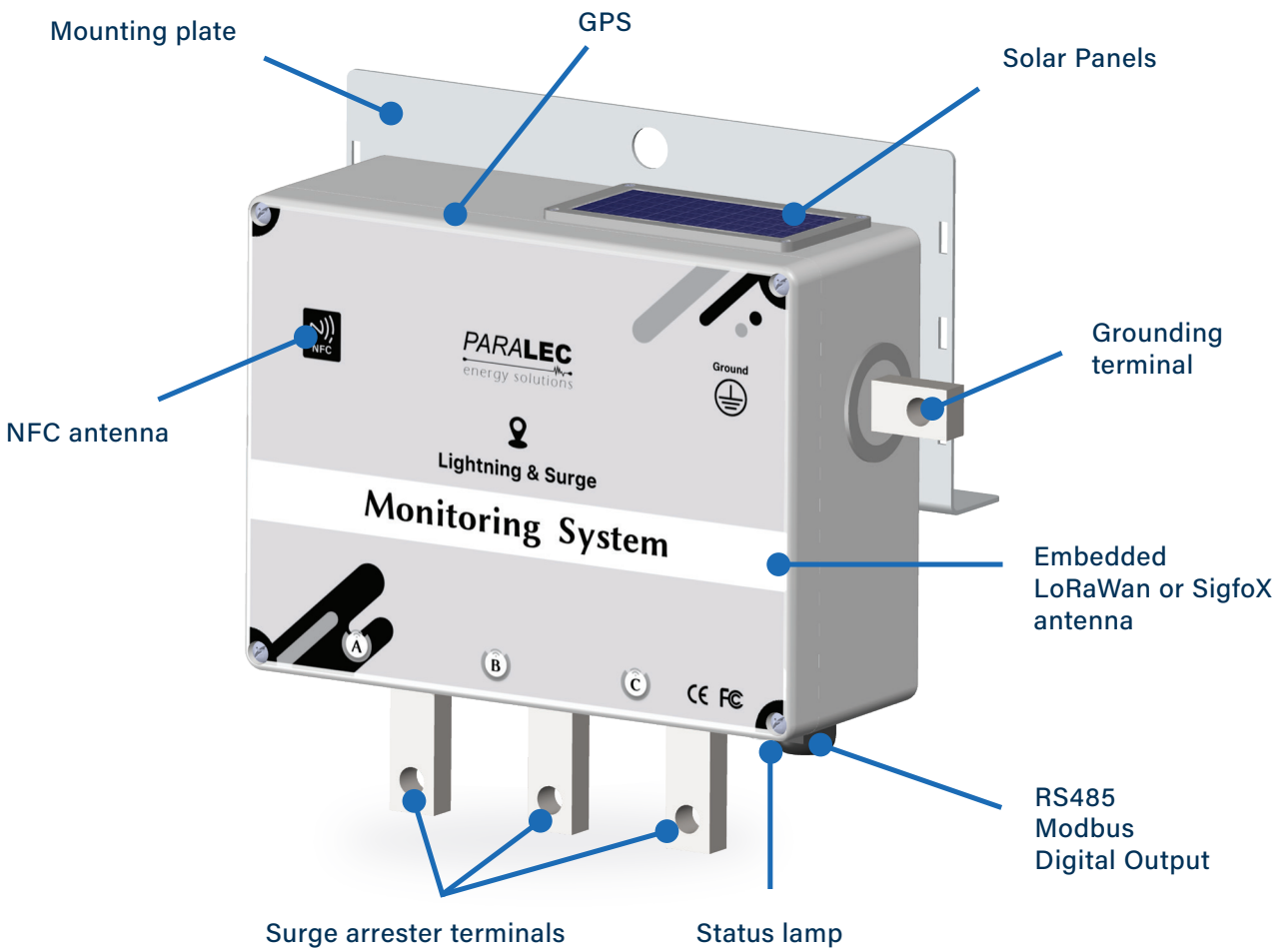

TECHNICAL CHARACTERISTICS

REFERENCE	SMC
EARTHING CONNECTION	
CONDUCTOR DIAMETER RANGE	5 to 25 l 35 to 300mm^2
INSTALLATION ON THE CONDUCTOR	Terminals, 9mm hole in series
LIGHTNING EVENT COUNTER	
MINIMUM DISCHARGE PEAK CURRENT DETECTED - 8/20us waveform - IEC 62561-6	100A
MAXIMUM DISCHARGE PEAK CURRENT DETECTED - 10/350us waveform - IEC 62561-6	100 kA
RESPONSE TIME - ms	1.7 µs
MINIMUM TIME BETWEEN 2 STROKE FOR REGISTRATION, RESPONSE TIME	1 µs
LONG DURATION CURRENT WITHSTAND CAPABILITY	2500A for 4ms
HIGH CURRENT WITHSTAND CAPABILITY	100 kA
IMPULSE CURRENT PEAK MEASUREMENT	YES
IMPULSE DURATION	YES
LIGHTNING POLARITY	YES
MEASUREMENT	
MINIMUM DISCHARGE PEAK CURRENT MEASURED - 8/20us waveform - IEC 62561-6	100A
MAXIMUM DISCHARGE PEAK CURRENT MEASURED - 10/350us waveform - IEC 62561-6	50 kA
FREQUENCY	50/60 Hz
FOLLOW CURRENT / GROUND FAULT RANGE	5 to 10 000 A
TOTAL LET THROUGH I^2.t	YES
ELECTRIC CHARGE, COULOMB	0 to 4C
WAVEFORM RECORD	YES, initial 100 µs
LEAKAGE MEASUREMENTS	
TOTAL LEAKAGE CURRENT	50 µA to 50 mA
ACCURACY (at Tamb ≤ 40 °C)	± 5%
SURFACE POLLUTION & HUMIDITY INGRESS DETECTION (UNDER EVALUATION)	YES
THIRD HARMONIC LEAKAGE CURRENT	50 - 5000 µA
ACCURACY (at Tamb ≤ 40 °C)	± 10%
RESISTIVE LEAKAGE CURRENT	50 - 5000 µA
ACCURACY (at Tamb ≤ 40 °C)	± 10%

TECHNICAL CHARACTERISTICS

SMC MV/HV
PARALEC energy solutions

ENVIRONMENTAL CONSTRAINTS

TEMPERATURE - °C	Class C2: -40 to +70
PROTECTION CLASS	IP65, NEMA 4X
TEMPERATURE CHANGE RATE - °C/min	Class C2: 1,0
RELATIVE HUMIDITY - %	Class C2: 10 to 100
MAX ABSOLUTE HUMIDITY - g/m3	Class C2: 35
MAX ALTITUDE - m	2000
ATMOSPHERIC PRESSURE - kPa	70 to 106
STANDARDS/TEST	IEC 62561-6:2018
LABEL INCLUDES	Hardware version number, serial number, manufacturing batch
UV STABILIZED HOUSING	YES
STAINLESS METAL	YES
TYPE OF SURGE COUNTER as per IEC 62561-6:2018	Type 1 and Type 2; outdoor

RECORD

NUMBER OF EVENTS	100 Events. For each Events up to 4 components. See below example.
NUMBER OF 1st STROKE WAVEFORM	5 last waveforms for100 µs at 1MSPS
TOTAL COUNTERS	Counter I2t lightning Counter I2t switching Counter I2t 50Hz Counter I2t leakage Counter I2t total Number of lightning events Number of switching events
MAX RECORDS	Max Total Leakage Max Resitive Leakage Max Power Frequency current Max Lightning Current Max Switching Current
PROTECTION DEVICE REMAINING LIFESPAN	% of life remaining Protection device end of life
COMMUNICATION	Last 50 communications

EVENT COMPONENTS RECORD EXAMPLE

EVENT COMPONENTS RECORDS LEAKAGE	Unit	Example of value
Date	Date	2021-05-06
Time	Time	14:30:05Z
Tot max mA	mA	0.5
Res max mA	mA	0.1
Cap max mA	mA	0.4
Electrical Field mV	mV	90 mV
Deph ms	ms	1.1
Temp °C	°C	37
I2t (A2s)	A2s	0.0002
Capacitance	pF	120
Tot min mA	mA	0.5
Res min mA	mA	0.1
Cap min mA	mA	0.4

EVENT COMPONENTS RECORDS LIGHTNING	Unit	Example of value
Date	Date	2021-05-06
Time	Time	14:30:05Z
Peak Current	kA	-1
Changes Coulomb	C	0.6
Duration	us	30
I2t (A2s)	A2s	34

INSTALLATION

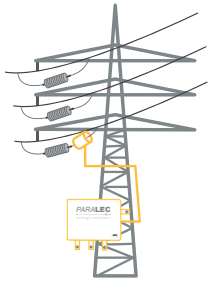

On overhead lines with TLA or EGLA

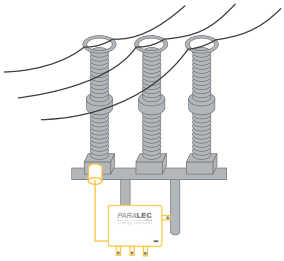

On substation MOA

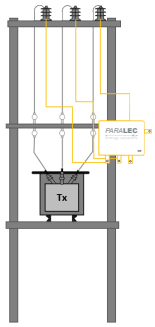

PMT MOA

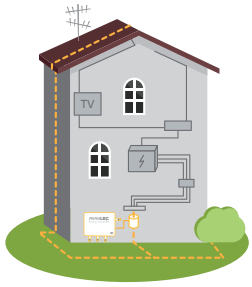

On building SPD

On MOA in Substation

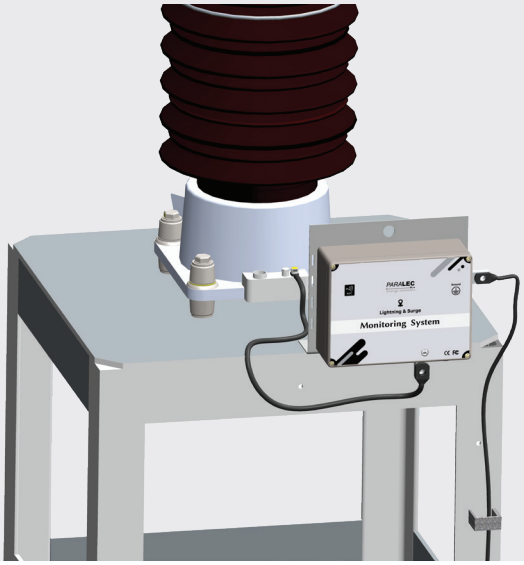

On MOA on PMT

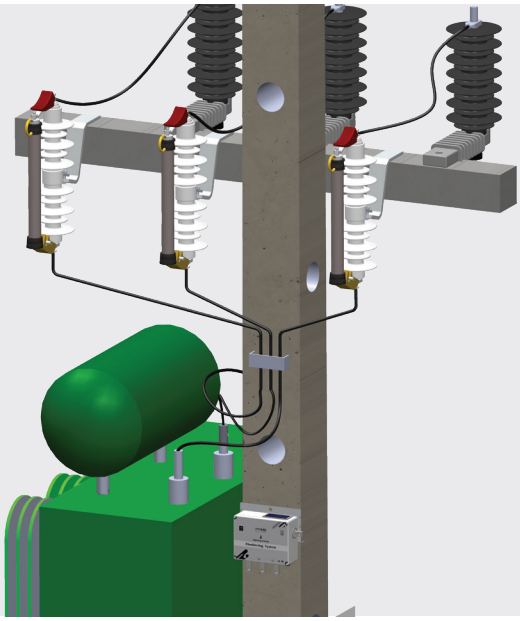

DIMENSIONS

SMC

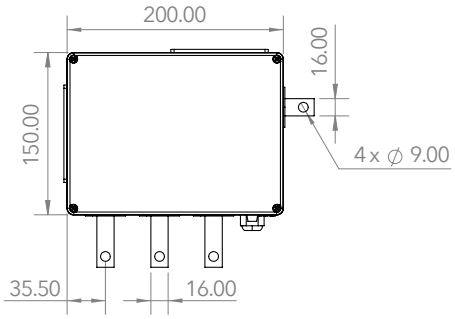

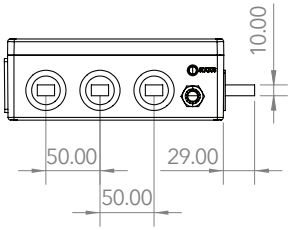

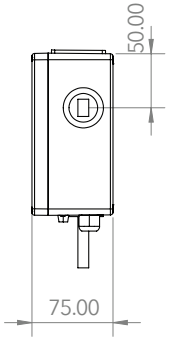

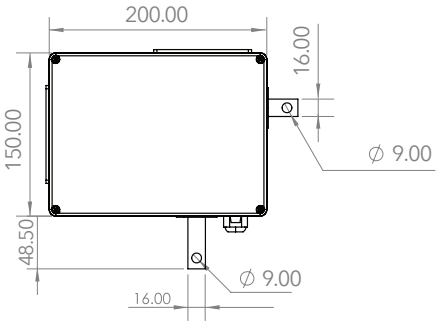

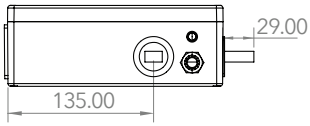

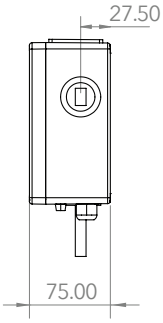

Mounting plate (included)

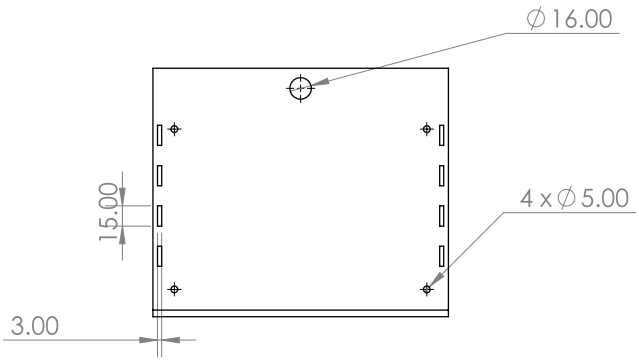

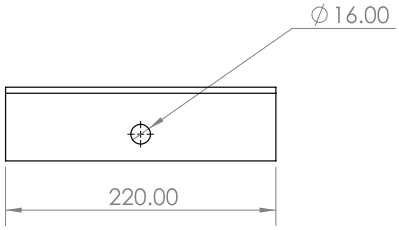

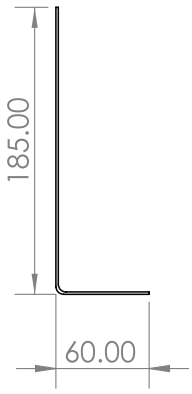

COMMUNICATION

SMC MV/HV
PARALEC energy solutions

Short Range

Wireless
NFC
Contact

Wireless
Bluetooth
10 to 20m

Wired
Modbus
Modbus RTU via 2 wires, RS485 to master

Long Range

Wireless
Sigfox

Wireless
LoRaWan
Up to 5km line of sight

LoRaWAN®
Gateway

Concentrator
Equipped with HMI, DataBase
LAN or broadband cellular network (4/5G)
IEC61850, DNP3, MODBUS, REST API

sigfox Cloud

SCADA / BMS

COMMUNICATION

Concentrator

Equipped with HMI, DataBase

LAN or broadband
cellular network (4/5G)
IEC61850, DNP3, MODBUS, REST API

Bluetooth / LoRaWan converter

SOFTWARE CONCENTRATOR

SMC MV/HV

PARALEC energy solutions

Lightning & Surge Monitoring | DEVICES | EVENTS | SETTINGS | MAP

List of Devices

SN	Name	Type	Protection Device	Location	Position	KV	Phase	Status
PAR65040001	Name 1	SMB	ESE AT	TANK 34	Door 4	N/A	N/A	OK
PAR65040002	Name 2	SMC	Metal Oxide Station Class	Tx1 - 220/33kV	Secondary	33	B	OK

Rows per page 4 1-4 of 100

Lightning & Surge Monitoring | DEVICES | EVENTS | SETTINGS | MAP

List of Events

Date Time	Device ID	Location	Type	Peak Current (kA)	Duration (µs)	Charges (C)	I²T (A²s)
2021-05-06 14:30:05	SLMD034	SS34 TX1	Lightning	+4	70	0,15	34
2021-05-06 14:30:05	SLMD034	SS34 TX1	Lightning	-2	30	0,07	20
2021-05-06 14:30:05	SLMD034	SS34 TX1	Lightning	+0.5	10	0,01	20

FILTER

Rows per page 4 1-4 of 100

SOFTWARE CONCENTRATOR

SMC MV/HV

PARALEC energy solutions

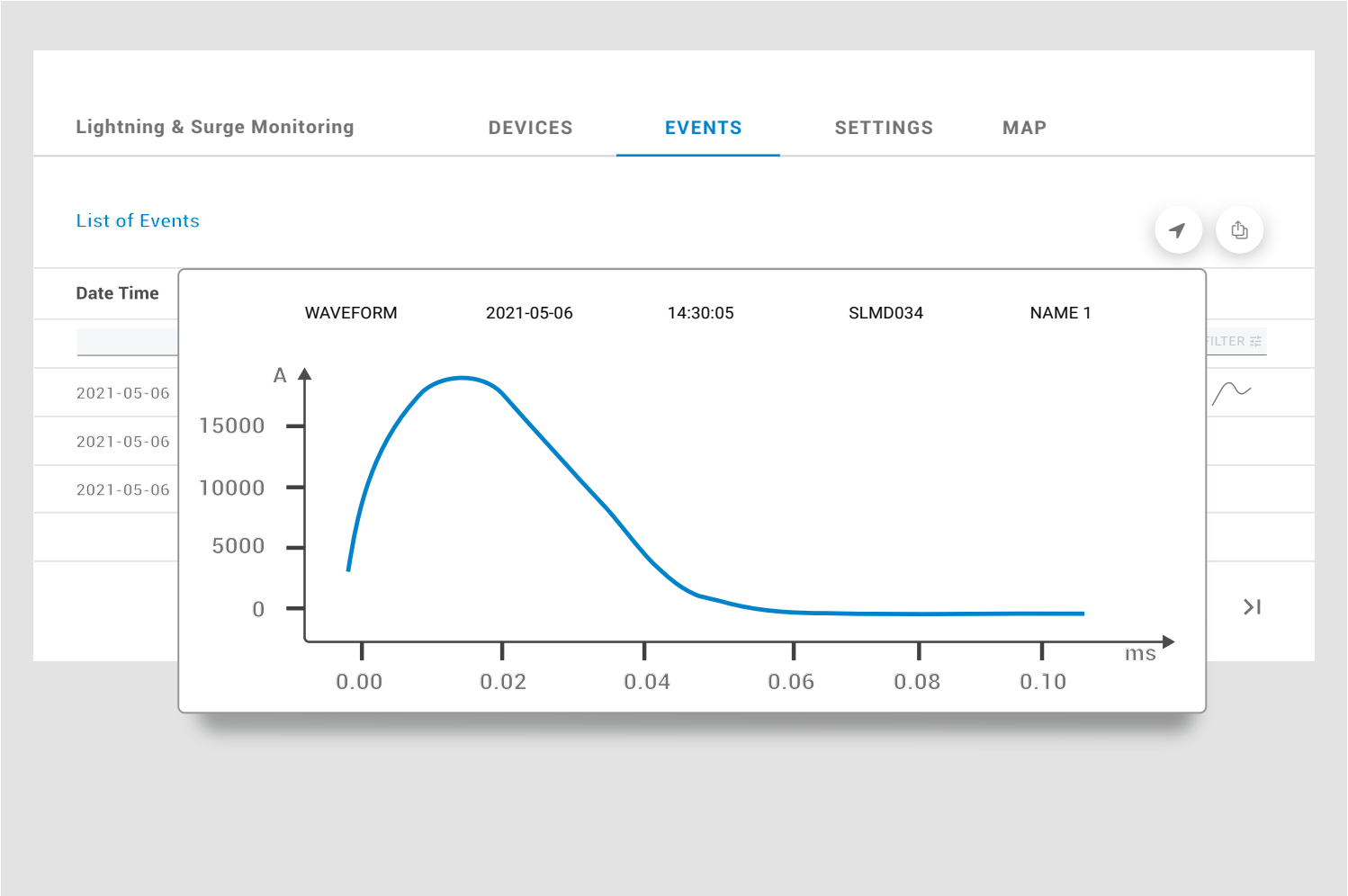

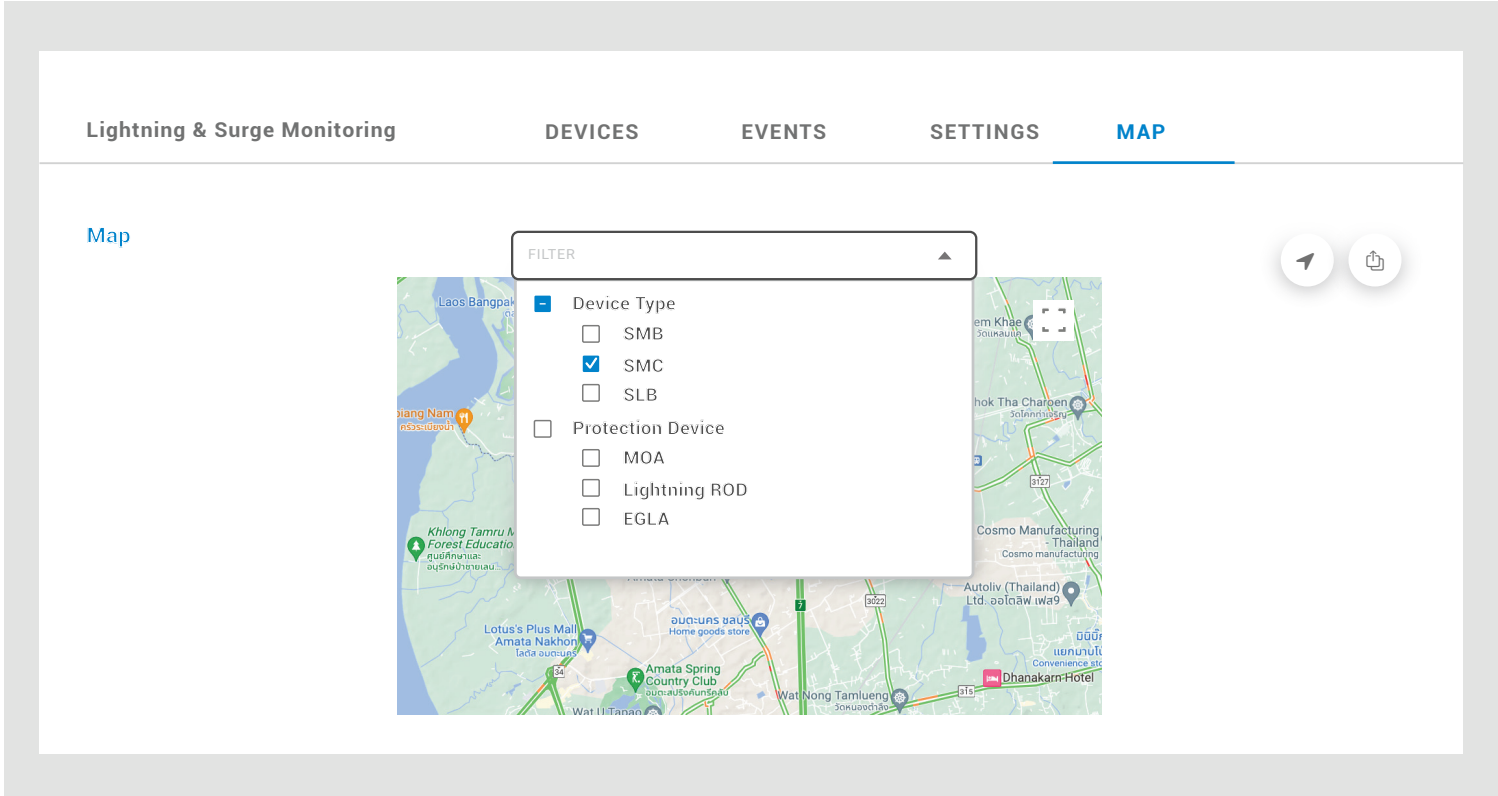

SOFTWARE CONCENTRATOR

SMC MV/HV

PARALEC energy solutions

Lightning & Surge Monitoring | DEVICES | EVENTS | SETTINGS | MAP

Devices Type I SN I Name

Counter I2t total	Max Resistive Leakage	Max Leakage	Power Supply	Last Communication
231 A^2s	0.3 mA	0.6 mA	OK	1h
20% remaining	+10% vs J-30 + 15% vs phase A, B 20% of max			

Number of Events	Max lightning	Max Switching
6	20kA, 30µs	1.2kA, 5ms

Leakage

- Total Leakage
- Resistive leakage
- Unbalance %

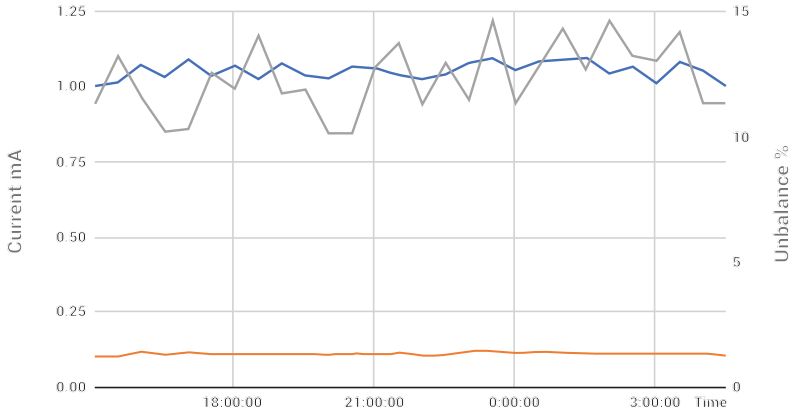

Overvoltage Events

Date Time	Type	Peak Current (kA)	Duration (µs)	Charges (C)	I^2T (A^2s)
2021-05-06 14:30:05	Lightning	+4	33	3C	34
2021-05-06 14:30:05	Lightning	-2	20	1C	20
2021-05-06 14:30:05	Lightning	+0.5	20µs	0.5C	20

Counters

Counter I2t lightning
Counter I2t switching
Counter I2t 50Hz
Counter I2t leakage
Counter I2t total

Max Total Leakage
Max Resitive Leakage
Max Capacity Leakage
Max Power Frequency Current
Max Lightning
Max Switching

SOFTWARE CONCENTRATOR

SMC MV/HV

PARALEC energy solutions

Lightning & Surge Monitoring | DEVICES | EVENTS | SETTINGS | MAP

Devices Type I SN I Name

Counter I2t total	Max Resistive Leakage	Max Leakage	Power Supply	Last Communication
231 A^2s	0.3 mA	0.6 mA	OK	1h
20% remaining	+10% vs J-30 + 15% vs phase A, B 20% of max			

Number of Events	Max lightning	Max Switching
6	20kA, 30µs	1.2kA, 5ms

Leakage

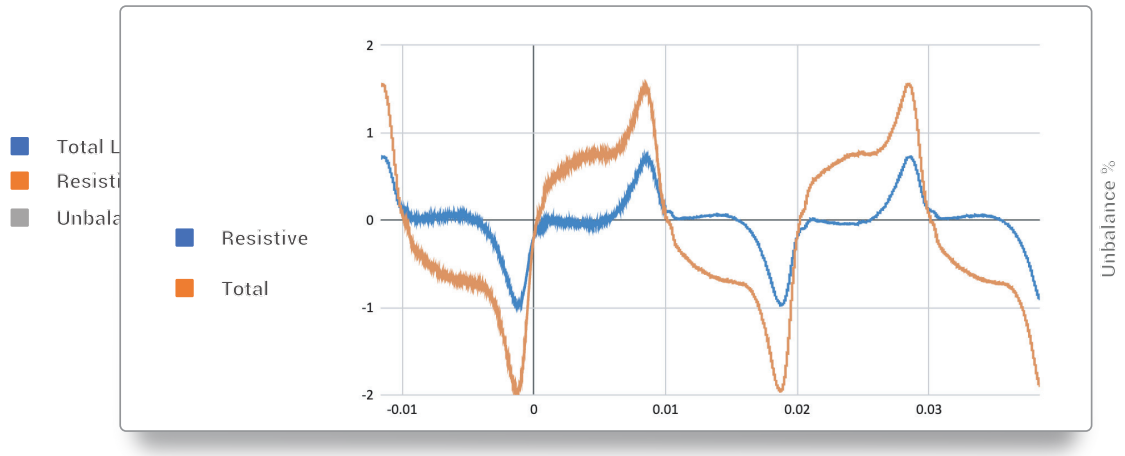

Overvoltage Events

Date Time	Type	Peak Current (kA)	Duration (µs)	Charges (C)	I^2T (A^2s)
2021-05-06 14:30:05	Lightning	+4	33	3C	34
2021-05-06 14:30:05	Lightning	-2	20	1C	20
2021-05-06 14:30:05	Lightning	+0.5	20µs	0.5C	20

Counters

Counter I2t lightning
Counter I2t switching
Counter I2t 50Hz
Counter I2t leakage
Counter I2t total

Max Total Leakage
Max Resitive Leakage
Max Capacity Leakage
Max Power Frequency Current
Max Lightning
Max Switching

SOFTWARE CONCENTRATOR

SMC MV/HV

PARALEC energy solutions

SMC

1,2	3	4	5	6	7	8
LL.	S	M	C	....	....	....
Line Lightning	SLMD	MOA		Communication	Power supply	Connection

6	
0	No com
N	NFC
D	Output (digital or analogic)
L	Lora (+NFC)
S	Sigfox (+NFC)
M	Modbus

7	
S	Self power supplied
E	External 12VDC
B	Battery
C	Battery + External, with battery charger

8	
1	1 terminal
2	3 terminals

Communication Devices

LL.SG.LB.B0.01.WW	LORA / Bluetooth wireless converter
LL.SG.LE.B0.01.WW	LORA gateway WAN

PARALEC ENERGY CO., LTD.

1000/5-6 Liberty Plaza, 20th Floor, Soi.Thonglor, Sukhumvit 55 Rd., Klongtun Nua, Wattana, Bangkok Thailand 10110

www.paralec.com
www.surge-lighting-arrester-monitoring.com

Tel. +66 (0)2 381 5886
Fax.+66 (0)2 381 5886

Email : info@paralec.com
LINE : @paralec